TRIKDIS

JOINT-STOCK COMPANY

Wireless security system RAS-002

CENTRAL receiver RI-4010V

(version Ver.RI-2.2-E xxx)

User manual

SAFETY AT WORK REQUIREMENTS

Before the usage of central receiver RI-4010V the operator must learn and strictly follow all safety at work requirements!

Central receiver RI-4010V is integral part of safety system; this part does work in continuous mode. Central receiver is powered from AC main. For prevention of the accidents (injuries caused by burns or voltage impact) and on purpose of long-term and secure operation of the receiver following safety requirements must be strictly meet.

Central receiver works in horizontal position.

Digital LVD indicator of the central receiver does represent actual time and a content of the received message. Indicator lamps of the receiver have such meaning:

- Illuminated green – power ON and the device is powered from AC main;
- Illuminated red – power ON and the device system is powered from standby accumulator;
- Illuminated blue – the device has received and acknowledged message.

Installation and service of the central receiver is permitted only for qualified personal, which possesses sufficient knowledge in the field of features of the devices, characteristics of radio waves propagation and safety requirements.

Central receiver RI-4010V is powered from AC mains with (50±1) Hz frequency and rated voltage 220 V, and from standby accumulator 12V/7Ah. Allowed limits of the AC voltage deviation are ±10 %. Rated current does not exceed 0,15 A. Power cable plug is suited for the AC mains circuits (sockets).

After actuated safety device of the central receiver some parts of the receiver remain under voltage. An operator must not rely upon safety device. Additional quick-operating safety device must be installed in the phase circuit.

An exchange in between of the connective cables during connection of standby accumulator or external 12 V power source is strictly forbidden. Changeable accumulators must be of the same type and must meet the requirements specified in the user manual.

THE RECEIVER MUST BE DISCONNECTED FROM AC MAINS BEFORE OPENING THE COVERS OF THE RECEIVER!

Central receiver may be disconnected from AC main with a button positioned on the rear cover of the receiver, by unplugging of the power cable and by unplugging of the power cable from AC mains socket. Disconnection devices must be positioned in easy accessible positions.

CENTRAL RECEIVER RI-4010V MUST BE EARTHED!
A LIGHTNING DISCHARGER MUST BE INSTALLED IN THE ANTENNA PLUG-AND-SOCKET!

Content

Central receiver RI-4010V

Central receiver RI-4010V is a microprocessor-based data-receiving device for the use in the wireless security system RAS-002. The receiver does receive and acknowledge a signal sent by subscriber‘s transmitter in communication channel and does present the signal in receiver‘s indicator and transmits the signal further for the processing by computer and printing.

Central receiver does work in the VHF frequency band. Distance of the communication with the subscriber‘s transmitter is 3÷15 km and depends from geographical location of secured objects, installation features, type of used antennas and their construction height. One-way communication is used.

For the signal reception a wireless communication module – receiver IVHF of the wireless security system RAS-002 – is used in the central receiver.

Application

Central receiver is intended for the following usage:

- wireless communication in security systems;
- transmitting of the emergency signals in the central monitoring station;
- remote control systems.

Composition and integration

Central receiver RI-4010V does consist of assembly body with internal stabilized power supply unit, fittings of the standby accumulator, control and indication elements, plug-and-sockets and a wireless communication module of the wireless security system RAS-002: receiver IVHF.

Composition of the central receiver:

- central receiver RI-4010V - 1 piece;
- power cable - 1 piece
- user manual of the central receiver - 1 piece.

Transportation and storage of the receiver

Central receiver RI-4010V must be transported by highway vehicles in the manufacturer‘s packaging.

The receiver must be stored in the manufacturer‘s packaging and protected from direct environmental impacts.

Horizontal position of the receiver is recommended during transportation and storage. Receiver must operate in horizontal position.

During transportation and storage the device must be protected from mechanical impacts, vibrations and other disturbances and direct environmental impacts.

Main characteristics

Central receiver RI-4010V does receive and acknowledge a signal sent by subscriber‘s transmitter in communication channel and does present the signal in receiver‘s indicator, does print the message and transmits the signal in the computer for the further processing. The receiver can be set for the operation in one or in several systems of the messages coding: RAS-002, LARS, LARS1 and Milcol-D.

Central receiver does permanently control of the communication channel condition and does measure the levels of the received signal or the ether-noise. Ether-noise level is represented in the receiver‘s indicator and is transmitted in the computer, too. The level of the message signal is measured during reception and the value of the signal level will be stored. The level of the

received signal is represented in the receiver‘s indicator and is transmitted in the computer together with the message content for the further processing. High dynamic range of the received signal measuring does ensure precise evaluation of the communication channel.

Central receiver does work autonomous; received messages are displayed in the receiver‘s indicator and accompanied by different acoustic signals. Received messages can be processed manually using control elements of the receiver.

The receiver is configured for the transmitting of the data in the central monitoring program. Indication of the receiver‘s indicator will be automatically reset by working central monitoring program. The receiver can be configured for the cooperation with central monitoring programs SIMS, SAMM, OMONIT and all MONAS versions.

When more messages are received simultaneously, then the messages are memorized in the receiver and the first message will be indicated in the receiver‘s indicator. A printer or computer, connected to the receiver, does print received message in turn and transmit for the further processing. If one of these devices (or both) is not connected, then the messages will be stored in the receiver‘s internal storage memory and will be transmitted after connection or activation of these devices.

Principle of operation

Communication module/receiver IVHF of the central receiver RI-4010V does operate as double transformation super heterodyne receiver. Received signal undergoes detection, filtering, limitation by a comparator and a processing by microprocessor. The microprocessor simultaneously controls frequency synthesizer and ensures stable working frequency.

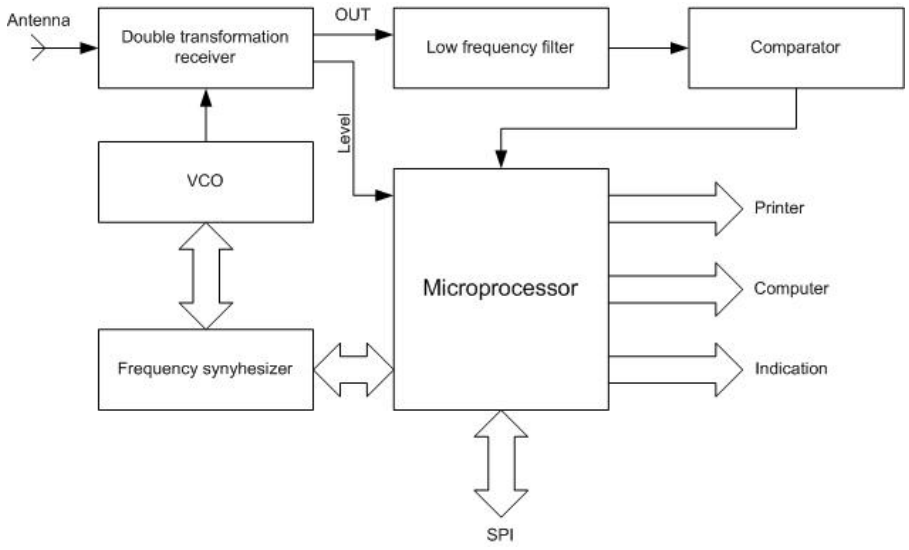

Fig. 1 Block diagram of the central receiver

Received message is acknowledged accordingly to the structure of a coded signal, undergoes complete decryption and an identity of two a successive message is verified. If two successive messages are identical then the received message is estimated as correct message. Correct message will be filtered by software and transmitted for the further processing (indication, processing by computer and printing). Fig. 1 shows the block diagram of the central receiver.

Processing of the signal, measuring of the received signal level, software filtering of the message, data transmitting to the indicator, printer and computer is controlled by the microprocessor. Control and signal‘s processing software is stored in the microprocessor‘s internal storage memory; the software is set during production or configuration. Received and acknowledged message will be displayed in the receiver‘s indicator and accompanied by indicator lamp and acoustic signal.

Built-in power unit does ensure powering of all receivers’ components with stable power voltage, charging and availability of the standby accumulator. Power unit has quick-operating protection against short circuit. In case of AC mains failure the receiver will be automatically powered by standby accumulator. Power status is indicated by indicator lamps. External DC power unit can be connected, if required.

Technical parameters

1.Working frequency of the central receiver RI-4010V is from 146 until 174 MHz. Working frequencies has been set during production and will be not changed during operation. Frequency stability of ± 1000 Hz is ensured. Input resistance of the receiver is 50 Ω.

2.Objective sensitivity (input voltage) of the receiver by signal/noise ratio of SINAD 12 dB no less as 0,35 μV.

3.Selectivity of the receiver in the neighboring channel no less as 60 dB, in the mirror channel no less as 70 dB. Channel separation equals to 12,5 kHz.

4.Input signal of the receiver is measured and the signal level is determined accordingly to the levels of the RAS-002 system. Input signal in the range of 0 – 250 μV is allowed and will be assigned to one of 14 levels.

5.The receiver does acknowledge 256 different messages sent by 8191 subscribers’ transmitters.

6.Central receiver has interfaces for the configuring of the receiver‘s parameters and data communication with other external devices:

- serial interface RS232 for the connection of a computer;
- parallel printer interface Centronics.

7.Internal receiver‘s data storage memory can be read by each interface and has a capacity of 250 last messages. Actual content of the receiver‘s memory can be read one time.

8.After reception of the message in the receiver‘s indicator following data will be indicated: reception time, subscriber’s transmitter number, accident code, signal level and a mark of the direct received or relayed message. Received message is accompanied by an acoustic signal.

9.The receiver has control elements for the setting of time, date and for processing of the received message in manual mode.

10.Central receiver RI-4010V is powered from AC mains (50±1) Hz 220 V voltage and from standby accumulator 12V/7Ah. Allowed deviation of the AC mains voltage is ±10 %. Rated AC mains current does not exceed 0,15 A.

11.Powering time from fully charged standby accumulator does not exceed 5÷10 hours. Rated standby accumulator current does not exceed 0,6 A.

12.Central receiver RI-4010V does operate and ensures stated technical parameters in the ambient temperature range from– 10°C until + 55°C and relative humidity of 90 % the ambient temperature equals to +20°C.

13.Overall a dimension of the central receiver does not exceed 450 x 95 x 400 mm.

14.Weight does not exceed 3 kg.

Control, indication and external plug-and-sockets of the central receiver

General view of the central receiver, position of control and indication elements and external plug-and-sockets is shown in the figures 2 and 3. Inscription meaning is indicated in the appendix A.

Power ON switch for the powering of the central receiver is positioned on the rear panel. For the processing of the messages in manual mode the buttons positioned in the front panel are used:

FUNCTION	ON/OFF of the setting mode.
SOUND	Received message sound OFF button.
NEXT	Indicator data OFF button; switches OFF read message data.
POSITION	Alteration of the programmed parameter position; setting of time and date.
>	Increasing of the value.
<	Decreasing of the value.

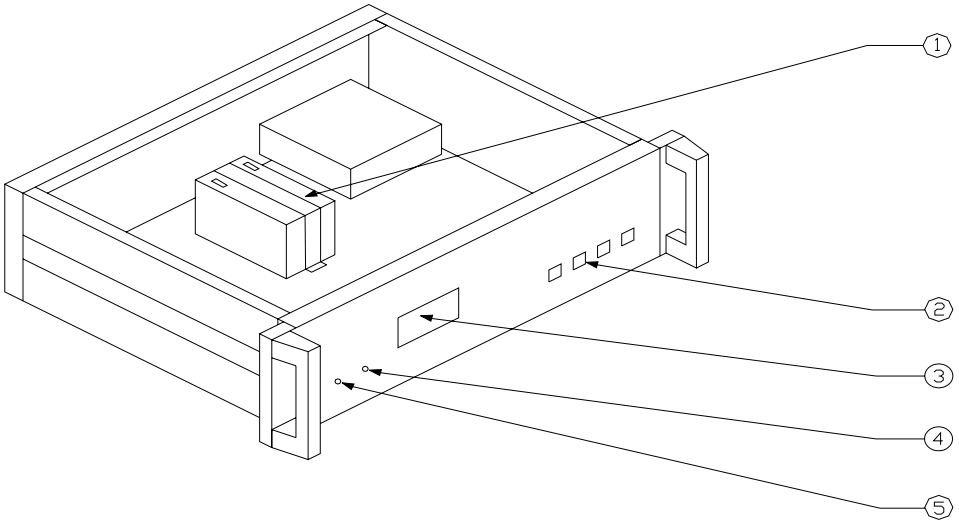

Fig. 3 **Central** receiver, front view

1. Standby accumulator
2. Control buttons
3. LCD indicator
4. Signal decoding light lamp
5. Power voltage light lamps

LCD indicator does show content of the received message, signal level and reception mode mark (direct received or relayed signal). Decimal or hexadecimal numbers can be used for the indication of the level or accident code. Positioning of the informative numbers can be changed. The supplier will set the positioning accordingly to the users requirements.

1	**2**	**:**	**2**	**5**	**:**	**5**	**8**			*****	**L**	**-**		**X**	
O	**b**	**j**		**X**	**X**	**X**	**X**		**c**	**o**	**d**	**e**	**X**	**X**	**X**

where:

Obj xxxx	number of the subscriber‘s transmitter, consisting of four digits (until 8191);
code xxx	code of an accident in the protected object (range from 0 until 256);
L-xx	level of the received signal (range from 0 until 15);
F-x	ether noise (range from 0 until 15);
*	relay mark, identifying a relayed signal.

Signal decoding blue light lamp SIGN is illuminated when a signal is received and currently undergoes decoding. Power voltage light lamps do indicate power supply modus currently in use: red BAT light lamp is illuminated when the receiver is powered from standby accumulator, green POWER light lamp is illuminated when the receiver is powered from AC mains.

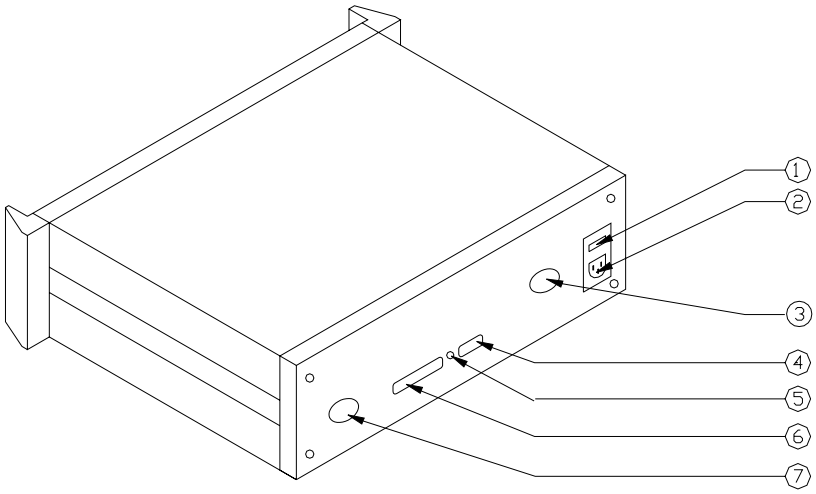

Fig. 4 Central receiver, rear view

1. Safety fuses and power switch
2. Plug-and-socket for the AC mains power voltage
3. External power supply plug-and-socket
4. Computer interface plug-and-socket
5. RESET button
6. Printer interface plug-and-socket
7. Antenna plug-and-socket

Assignment of the plug-and-sockets is specified by the descriptions on the rear panel. RESET button is used for the resetting of the software failures without the opening of the receiver‘s cover.

Installation and preparation of the central receiver

Central receiver must be installed in the central monitoring station. Central receiver does work in the horizontal position. The objects, which do deteriorate cooling or may damage cover of the central receiver, are not allowed to set on the receiver.

Grounding cable and antenna must be connected to the receiver. In the central monitoring station must be installed a computer for the data processing and matrix-dot printer. With the connected printer every received message will be printed out. A printer, connected to computer, can print processed by software messages, stored in a data archive.

For the signal reception must be used high installed resonance antennas with circular pattern in horizontal plane and high gain factor (higher as 4 dB). Action radius of the central receiver depends upon installation height and gain factor of an antenna. Antenna pole must be earthed.

For the connection of an external antenna with the central receiver a coaxial cable with low suppression in the VHF frequency band must be used. Usage of a cable RG213 or better is recommended.

A lightning discharger must be installed between antenna output and receiver‘s input. Take care for secure grounding of the receiver‘s body and lightning discharger.

In case of high ether noises the usage of coaxial antenna filters with narrow transmittance frequency band (approximately 300 kHz) is advisable.

First preparation of the central receiver step is installation of standby accumulator. An sealed, 12V, 7Ah capacity accumulator suitable for the continuous operation (for example, Power Sonic PS-1270, Alarm Supplies PB12-7) must be used with central receiver.

After inspection of the condition of supplied central receiver‘s unscrew two screws in the end of the upper cover and take off the upper cover. Insert an accumulator, fasten the accumulator with a fixing bail and connect red cable to the“+” terminal of the accumulator, and a black cable to the “–“ terminal.

After a short acoustic signal the numbers “00:00:00” appears in the receiver‘s indicator. Put upper cover in the place and properly tighten the screws.

Connect grounding cable and a lightning discharger.

Connect external antenna.

Connect a computer to the central receiver (if required).

Connect a printer to the central receiver (if required).

Connect central receiver to AC mains with power cable and switch ON power switch on the rear panel.

ATTENTION:

Before connection of the central receiver to the AC mains the body of the central receiver must be grounded!

Before dismantling of the central receiver‘s cover AC mains must be disconnected; on this purpose pull the power cable out from the AC mains socket!

Operation of the central receiver without computer

Central receiver can operate in an autonomous mode. In such a case a matrix-dot printer must be connected to the central receiver and activated. A received message will be printed out immediately. Reception time will be registered by central receiver‘s clock. When the printer is disconnected an acoustic signal sounds and a message “Printer Error” periodically blinks in the receiver‘s indicator.

For the setting or changing of the central receiver‘s clock press button “FUNCTION”. A date and time will be shown in the screen. Select desired position with the button “POSITION” and set required value with arrow buttons “>” and “<”. When date and time are set then return to condition by pressing of the button “FUNCTION”.

When a personal computer is not installed then all information received from subscriber‘s transmitter (transmitter‘s number, message code, signal level) will be displayed in the receiver‘s indicator and accompanied by an acoustic signal. Received message must be processed in manual mode. A received message will be read and appropriate action will be taken accordingly to the person on duty instructions. Acoustic signal can be switched OFF with a button “SOUND”, data in the receiver‘s indicator will be cleared and transferred in the inner memory with button “NEXT”. If the button “NEXT” has been pressed immediately, then the sound switching OFF and information transfer does occur simultaneously.

If a received message has been not processed during 240 seconds then the message will be processed automatically and transferred in the inner memory. The receiver can store in the inner memory 250 last received messages. These messages can be read by connected computer one-time.

During operation without computer and receiver‘s acoustic signal sounds and a message “PC Error” periodically blinks in the receiver‘s indicator.

During configuration a modus with acoustic signals or without the signals confirming a disconnection of the printer or computer can be set.

Operation of the central receiver with software

A modem cable RS232 must be used for the connection of the central receiver with a computer.

We recommend to use for the data processing the software program for the central monitoring MONAS32, which does fully use the receiver‘s and system‘s possibilities. Minimal computer requirements:

Windows’9X or later operational systems;
minimally one free RS232 interface;
sound card with loudspeakers.

Other central monitoring programs can be used, too. It is important to configure the central receiver for the operation with selected program. If other programs are in use the received information of an accident will be displayed differently.

When a computer is connected to receiver and the central monitoring program is activated, and then received messages are transferred into computer for the further processing. The receiver does permanently control the link with the computer. In case of computer failure or when a computer was disconnected from the receiver, then the receiver turns in the autonomous mode. In this mode all received messages will be displayed in the receiver‘s indicator. If a computer was disconnected from the central receiver, then an acoustic signal sounds and a message “PC Error” periodically blinks in the receiver‘s indicator.

After activation of the program MONAS32 (MONAS+) a clock of the central receiver will be set automatically accordingly to the computer-time. Manual setting of the receiver‘s time can be required when other programs are in use. Received messages are displayed and accompanied by respective comments, determined in the database of the program and appropriate action will be taken accordingly to the person on duty instructions. An accident can be registered accordingly to the receiver‘s or software-time. Detailed description of the software is given in the software manuals.

A printer can be connected to the computer and activated. In this case received and processed by the software messages will be print.

Communication inspection and evaluation

When the installation of an antenna is completed, the adjustment of the antenna to the working frequency must be inspected (the factor of the stationary wave must be in range 1,0÷1,5), a link between receiver and the program and real action radius of the receiver must be inspected.

A receiver‘s link with the central monitoring program must be inspected in this way:

1) After activation of the program current time of the receiver‘s clock will be set automatically;
2) Programs MONAS32 and MONAS+ does show in data-window a signal indicating the link with the receiver;
3) A reception of the sent message in the data-window of the central monitoring program is inspected by activation of an input in the subscriber‘s transmitter.

The action radius of the receiver is inspected by activation of the subscriber‘s transmitter, powered from standby accumulator, located in various points if the territory serviced by the central receiver. Signals sent from subscribers transmitter located in 5 km distance must be received with a level no less as 1 - 2. Territory‘s relief and radio waves propagation conditions must be taken into consideration.

The receiver is regarded as properly installed and the communication is estimated as secure when messages, sent from a distance 3÷7 km, are correctly received.

Appendix A

Meaning of the indicators and buttons inscriptions

Inscription	Lithuanian	Meaning
POWER	MAITINIMAS	Power supply from AC mains switch
POWER	MAITINIMAS	Common marking of power plug-and-sockets
POWER	MAITINIMAS	Indicator lamp of the power voltages
SOUND	GARSAS	Switch-controlled acoustic signal (switch)
NEXT	SEKANTIS	Switch-controlled data display and acoustic signal (switch)
FUNCTION	FUNKCIJA	Date and time setting ON/OFF (switch)
POSITION	POZICIJA	Selection of the required position, which will be set, in the data number (switch)
<	mažiau	Alteration of the selected position (switches)
>	daugiau	
SIGN	SIGNALAS	Indicator of a received and acknowledged message
COMPUTER	KOMPIUTERIS	Plug-and-socket for the connection of computer
RESET	STARTAS	Receiver‘s reset button
PRINTER	SPAUSDINTUVAS	Plug-and-socket for the connection of printer
DC	Nuolatinė srovė	Plug-and-socket for the connection of external DC power supply

AC	Kintama srovė	Plug-and-socket for the connection of AC mains and a switch
	Įžeminimas	Ground terminal
	Pavojinga	Warning inscription

Location of the external power supply terminals

Terminal	Meaning
1	“–“ terminal “0 V”
2	“+“ terminal “+12 V”
3	unused
4	Ground terminal