Ethernet communicator *E14*

USER MANUAL

May, 2019

Contents

SAFETY REQUIREMENTS **3**
1 DESCRIPTION **4**
1.1 List of Compatible Control Panels *4*
1.2 Technical Parameters *5*
1.3 Terminal block description *5*
1.4 Light indication *5*
1.5 System overview *6*
1.6 Package Contents *6*
2. CONNECT *E14* TO TRIKDISCONFIG **7**
2.1 Add communicator in Protegus *7*
2.2 Communication settings with ARC *8*
3. PHYSICAL INSTALLATION **10**
3.1 Wire communicator to panel *10*
3.1.1 For UTC Interlogix (Caddx) control panels program the following settings *11*
3.2 (Optional) input connection *12*
3.3 Connect LAN cable *12*
3.4 (Optional) output connection *12*
4. ADD COMMUNICATOR IN PROTEGUS **13**
4.1 Additional settings for ARM/DISARM the system via keyswitch zone. *13*
4.2 System management with Protegus *15*
5. CONNECT *E14* TO TRIKDISCONFIG **15**
6. SET OPERATION PARAMETERS **17**
6.1 Status bar description *17*
6.2 System settings window *18*
6.3 Reporting window → ARC reporting tab *19*
6.4 Reporting window → Protegus service tab *19*
6.5 Event Summary window *20*
6.6 Reset factory settings *21*
7. PERFORM SYSTEM TEST **21**
8. MANUAL FIRMWARE UPDATE **21**

Safety Requirements

The security alarm system should be installed and maintained by qualified personnel.

Prior to installation, please read carefully this manual in order to avoid mistakes that can lead to malfunction or even damage to the equipment.

Disconnect power before making any electrical connections.

Changes, modifications or repairs not authorized by the manufacturer shall void your rights under the warranty.

Please act according to your local rules and do not dispose of your unusable alarm system or its components with other household waste.

1 Description

Communicator ***E14*** is intended to upgrade compatible intruder alarm panels for event signalling via wired Internet (Ethernet).
Customers are informed about security system events in ***Protegus*** app. Communicator can Arm/Disarm the alarm system via keyswitch zone.
Communicator transmits full event information to Alarm Receiving Centre.

Features

Connection

- Direct connection to supported panels for quick installation and event reporting.

Communications

- Simultaneous event reporting to ***Protegus*** Mobile/Web application, allowing user to remotely monitor and control his alarm system
- Integration with any monitoring software with Trikdis receivers supporting Surgard SG-MLR2 protocol
- Can send events to universal DC-09 receivers
- In case of lost connection with the main IP address, switches automatically to backup IP address
- Communication in secure encrypted protocol

Configuration

- Quick and easy installation
- Remote configuration and firmware updates
- Two access levels for setting of operating parameters

1.1 List of Compatible Control Panels

Manufacturer	Model
DSC®	PC1616, PC1832, PC1864 PC585, PC1565, PC5020
PARADOX®	SPECTRA SP5500, SP6000, SP7000, 1727, 1728, 1738
	MAGELLAN MG5000, MG5050
	DIGIPLEX EVO48, EVO192, EVO96, NE96
	ESPRIT E55, 728ULT, 738ULT
UTC Interlogix®	NetworX (Caddx) NX-4v2, NX-6v2, NX-8v2, NX-8e
Pyronix®	MATRIX 424, MATRIX 832, MATRIX 832+, MATRIX 6, MATRIX 816
GE Caddx	NX-4, NX-6, NX-8

Manufacturer	Model
Secolink	PAS832v1.

1.2 Technical Parameters

Parameter	Description
Power supply voltage	10-16 V DC
Current consumption	120 mA (stand-by) Up to 250 mA (transmitting)
Ethernet connection	IEEE802.3, 10 Base-T, RJ45 socket
Data pack content	Contact ID format codes
Memory	Up to 100 messages
Inputs	2, NC/NO/EOL-2,2 kΩ type
Output	1 OC type, commutating voltage up to 30 V and current up to 500 mA
Operating environment	From -10 °C to 50 °C, with relative air humidity 80% when +20 °C
Dimensions	88 x 62 x 26 mm

1.3 Terminal block description

Contact	Description
+DC	power supply terminal (10-16 V DC positive terminal)
-DC	power supply terminal (10-16 V DC negative terminal)
CLK	Synchronizing signal clamp
DATA	Data signal clamp
IN1	1st input clamp (selectable type)
COM	Common (negative)
IN2	2nd input clamp (selectable type)
OUT	Out terminal (OC type), current up to 500 mA
A RS485	*RS485* Bus A contact
B RS485	*RS485* Bus B contact

1.4 Light indication

LED	Operation	Description
"Network" displays the status of connection to the Internet	Green ON	Communicator is connected to the Internet
	Yellow ON	TCP/IP session is open
"Data" displays data transfer	Green ON	Unsent messages present
	Red ON	Messages cannot be sent

LED	Operation	Description
	Green flashing	Messages are being received from the control panel
"Power" displays power supply status and the functioning of the microprocessor	Green flashing	Power supply is sufficient,
	Yellow flashing	Power supply is not sufficient (≤11,5 V),
"Trouble"	Red ON	Computer network connectivity problems
	No flashing/ No light up	Works without problems

Note: Before configuration, make sure you have all the necessary components:

1) USB Mini-B cable is required for configuration.
2) „CAT-5 Ethernet" cable (maximum 100 m in length).
3) At least 4 wired cable to connect communicator to the security alarm system.
4) CRP2 cable to connect communcicator to the Paradox control panel's Serial Port.
5) Flat screwdriver.
6) User Manual for control panel to which Trikdis communicator will be connected.

Missing components order separately from your local distributor.

1.5 System overview

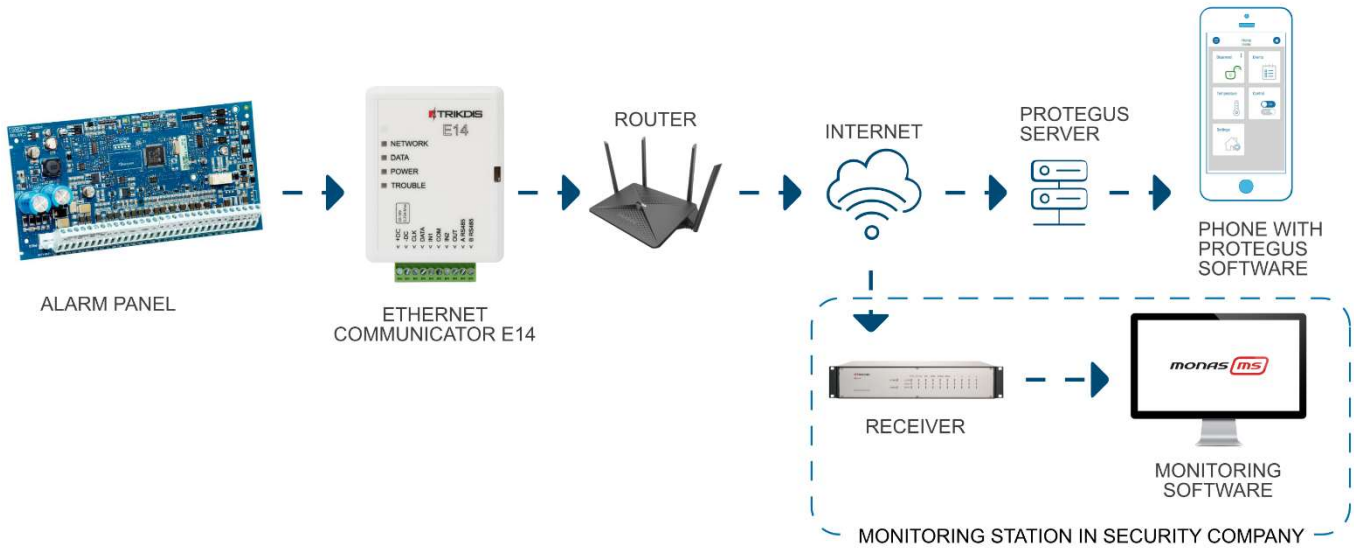

1.6 Package Contents

Communicator ***E14***	1 pc.
User manual	1 pc.
Two-sided adhesive tape (10 cm)	1 pc.

2. Connect *E14* to TrikdisConfig

1. Download ***TrikdisConfig*** from www.trikdis.com (in search field type ***TrikdisConfig***), and install it.
2. Remove the ***E14*** cover by using a flat screwdriver as shown below:

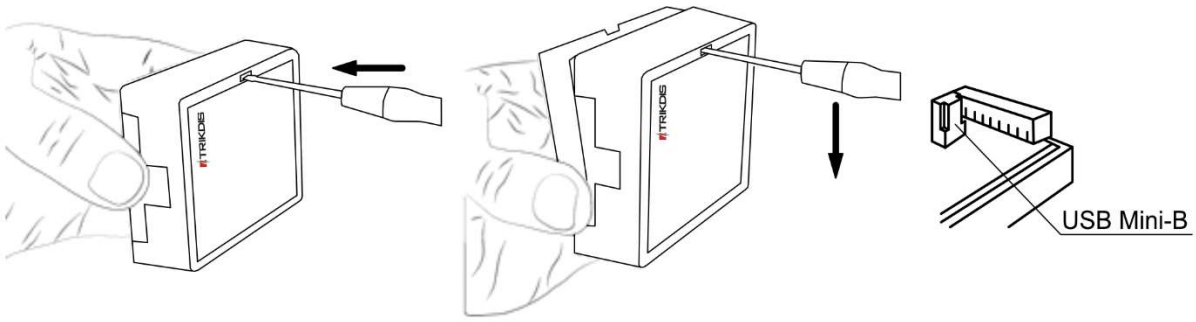

3. Connect ***E14*** to your computer via USB Mini-B cable.
4. Run the configuration software ***TrikdisConfig***. The software will automatically recognise ***E14*** and will open a window for communicator configuration.

   Click **Read [F4]** to read the communicators parameters and enter the Administrator or Installer code in the pop-up window.

Note: Click **Read [F4]** to scan and show settings that are recorded on the device.

Press **Record [F5]** to save settings on the screen to the device.

Click **Save [F9]** to save settings to the configuration file, which you can then upload to other devices. This allows you quickly configure several products with the same settings.

Click **Open [F8]** and browse your computer to find the configuration file to set up the communicator from a saved configuration file.

To restore the factory settings, press ***Restore*** button at the bottom left of the window.

2.1 Add communicator in Protegus

In the *"System Settings"* window:

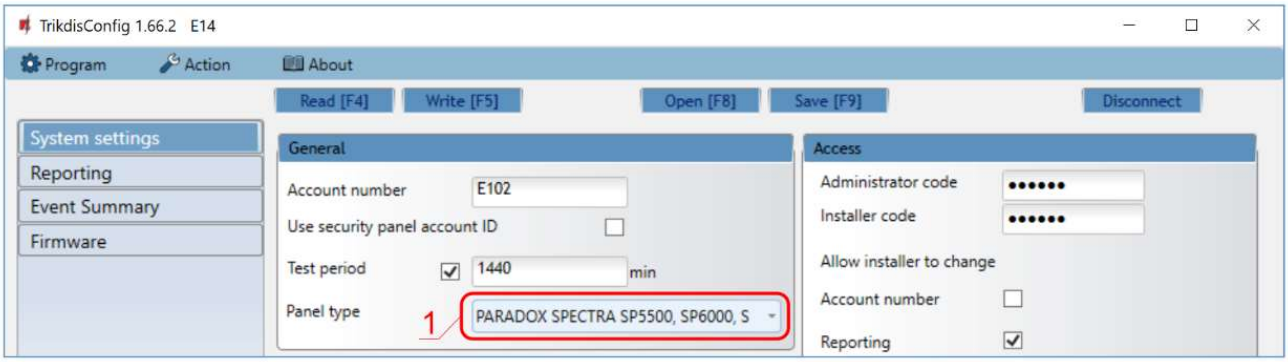

1) Select **Panel type** that will be connected to the communicator.

In the window "Reporting" tab "Protegus Service":

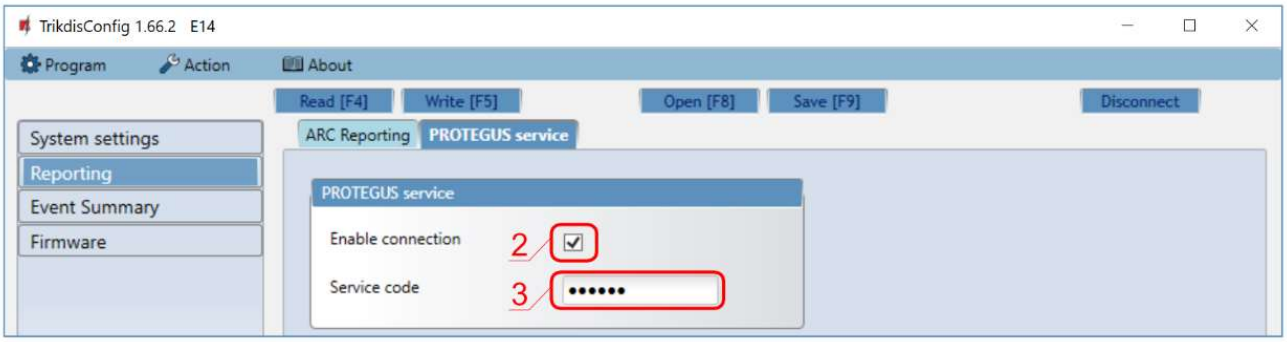

2) Check **Enable connection** in ***Protegus*** service checkbox.
3) Change the **Service code** for logging in to ***Protegus***, if you want to ask users to add it by adding the ***Protegus*** system in the application (factory default - 123456).

More about other ***TrikdisConfig E14*** settings see 6 " Set operation parameters ".

2.2 Communication settings with ARC

In the *"System Settings"* window:

1) Enter **Account Number.**
2) Select **Panel type** that will be connected to the communicator.

In the window "Reporting", tab "ARC Reporting" primary communication channel:

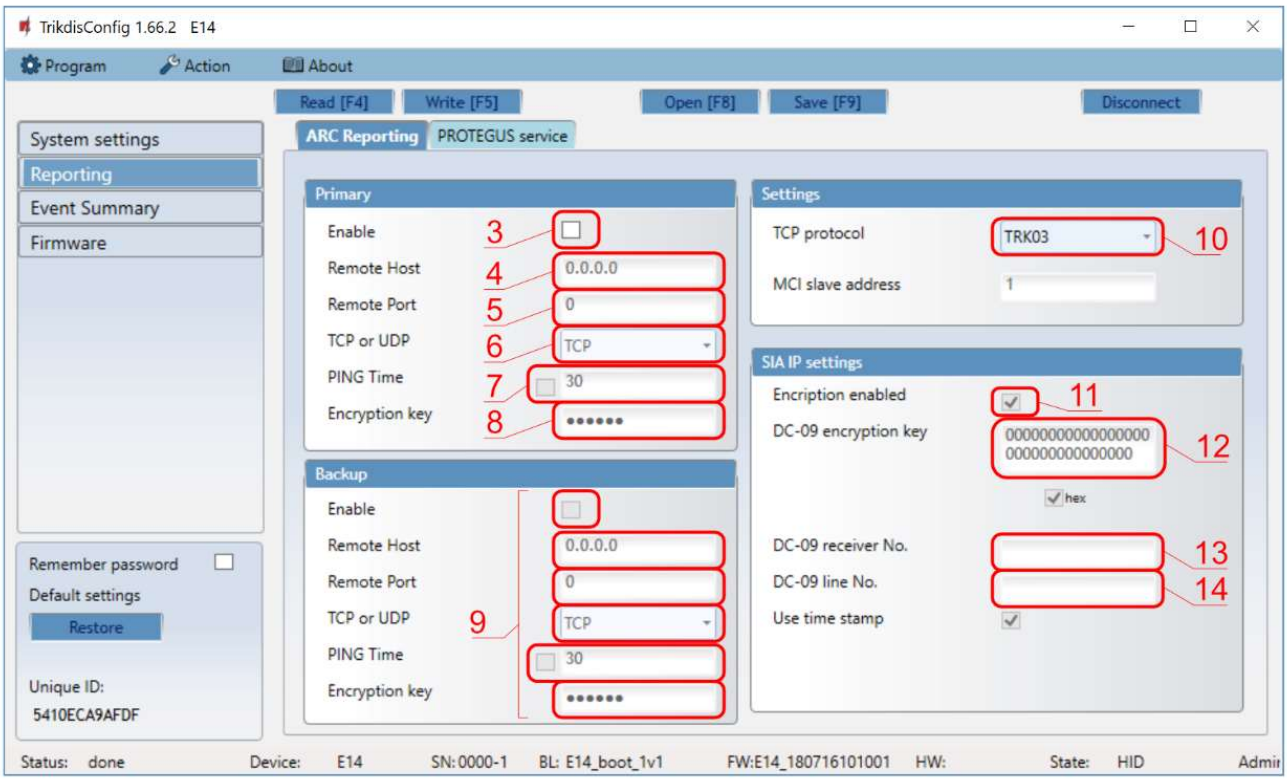

3) **Enable** – enable primary communication channel.
4) **Remote host** – enter receiver IP address.
5) **Remote port** – enter the receiver port number on the network.
6) **TCP or UDP** – select which protocol (TCP or UDP) should be sent messages.
7) **PING Time** – PING signal transmission period.
8) **Encryption key** – enter encryption key that is set in the receiver.
9) (Recommended) Configure the **Backup** Channel Settings.
10) **TCP protocol** – select which encoding protocol will be use: TRK (for TRIKDIS receivers), DC-09_2007 or DC-09_2012 (for universal receivers).
11) **Encryption enabled** – select protocol
12) **DC-09 encryption key** – enter encryption key that is set in the receiver.
13) **DC-09 receiver No.** - – enter receiver number.
14) **DC-09 line No**. – enter receiver line number.

If you selected **DC-09** message transmission encoding, in addition in the „Send to ARC“ window, on the Settings tab, enter the object, line and receiver numbers.

In the window "Reporting" tab "Protegus Service":

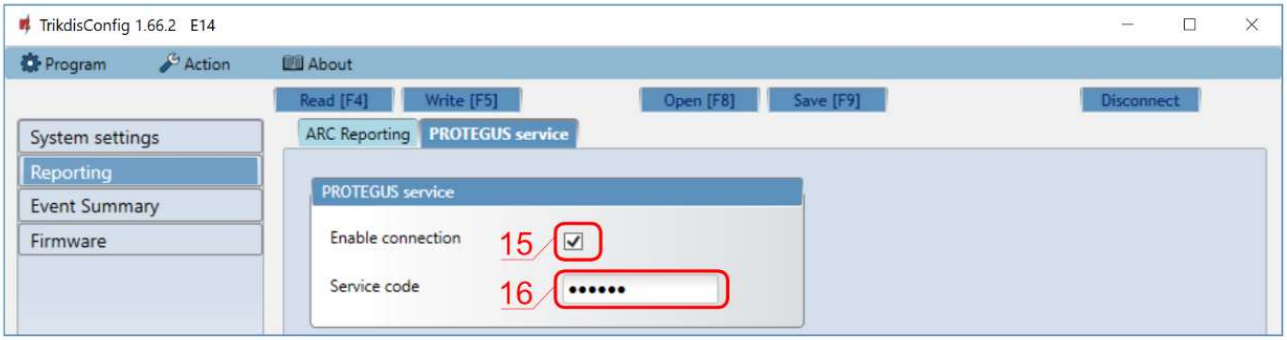

15) Check **Enable connection** in ***Protegus*** service checkbox.

16) Change the **Service code** for logging in to ***Protegus***, if you want to ask users to add it by adding the ***Protegus*** system in the aplicacion (factory default - 123456).

More about other ***TrikdisConfig E14*** settings see 6 " Set operation parameters ".

3. Physical installation

3.1 Wire communicator to panel

Following the provided schematics connect the communicator to the control panel.

DSC panel connection diagram

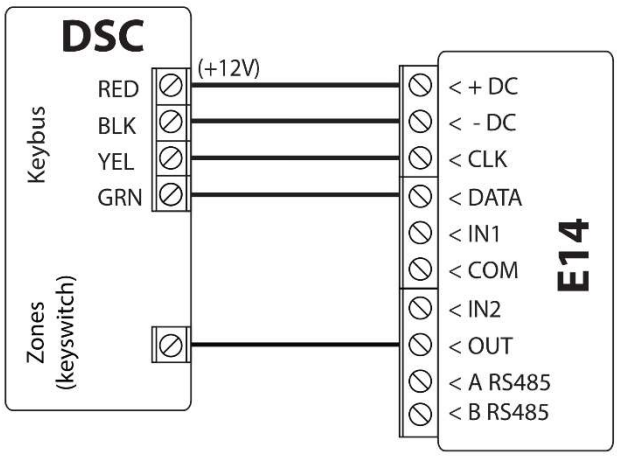

PARADOX panel connection diagram

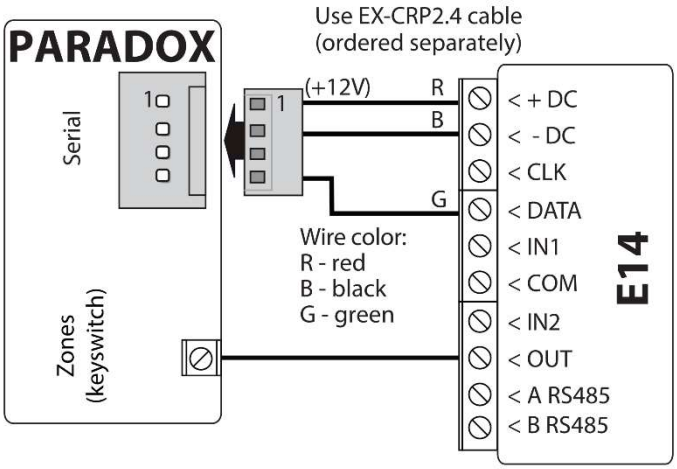

CADDX panel connection diagram

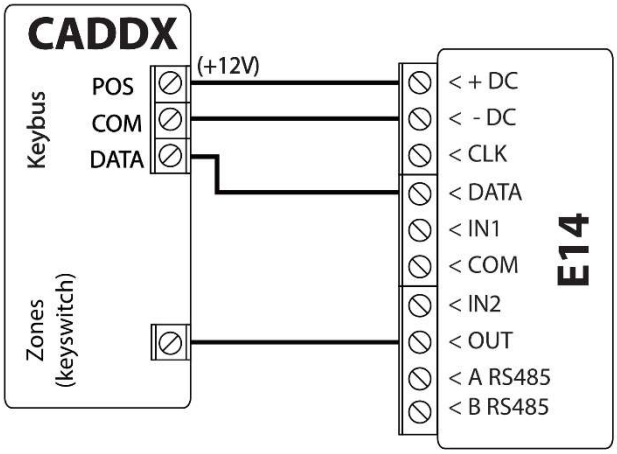

PYRONIX panel connection diagram

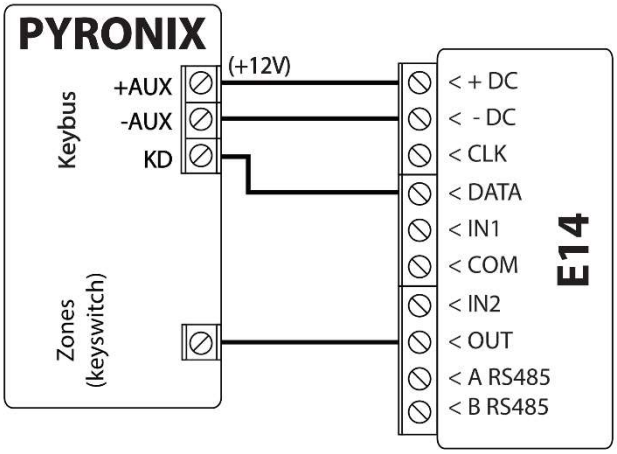

SECOLink panel connection diagram

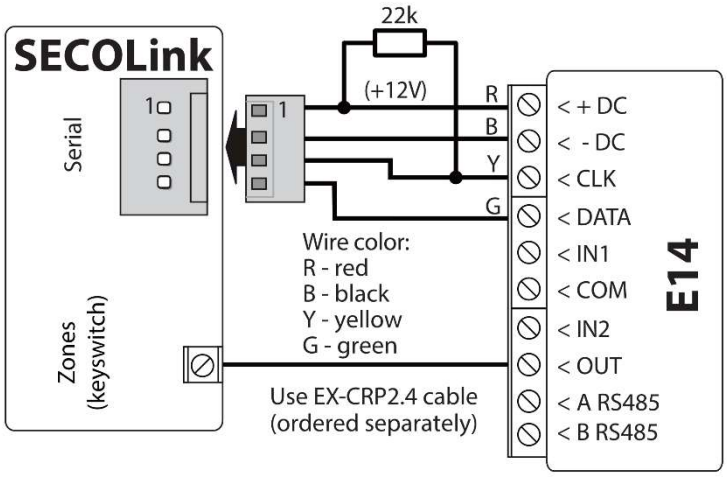

Important:	In ***Protegus*** app one PGM output can be assigned to control one Area (1 PGM - 1 Area; 2 PGM - 2 Areas) regardless of how many areas are controlled by same keyswitch zone in panel. Set which Area will be controlled by ***Protegus*** in system **Settings.** There select the checkbox **Arm/Disarm with PGM1,** and the number of Area, which you want to control. In ***Protegus*** **Areas** window, you will see all areas available in the system, with controllable areas highlighted.

3.1.1 For UTC Interlogix (Caddx) control panels program the following settings

In order for communicator ***E14*** to work with Caddx security control panels NX-4v2, NX-6v2, NX-8v2, NX-8e, control panels` locations 23 and/or 37 must be set as shown in the table below. When there are more than one partition in NX-8v2, NX-8e, also program locations 90, 93, 99, 102, 105, 108.

To enter program mode by default:

1. Press [*8 9713] and enter device number (by default 0).
2. Using control panel`s installation manual, set locations and features of segment.

If you want to select all eight features of a segment, press 1, 2, 3, 4, 5, 6, 7, 8. Symbol * shows that feature is turned off.

Location	Segment	Features of segment
23	3	12345678
37 (optional, system events)	3	12345678
	4	1234567*
90	3	12345678
93	3	12345678
99	3	12345678
102	3	12345678
105	3	12345678
108	3	12345678

3.2 (Optional) input connection

The communicator contains two input terminals (IN1, IN2) for connection of sensors. Settings for input connection type and reports on activations are described in **6.5 Event summary.** Wire the inputs according to these schematics:

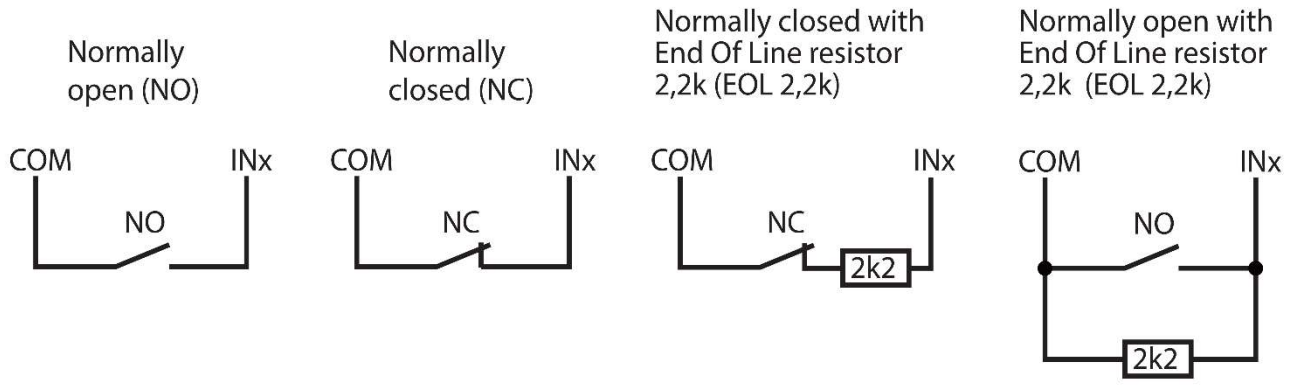

3.3 Connect LAN cable

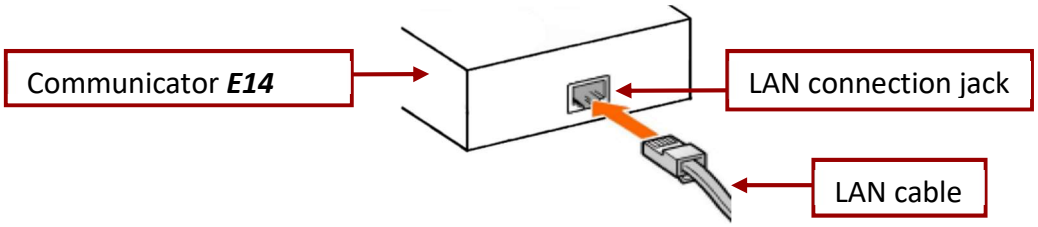

3.4 (Optional) output connection

The communicator contains one output terminal (OUT1) for remote control of various devices. To Arm/Disarm the control panel, connect OUT1 to panel's momentary keyswitch zone. Settings for output

control are described in **6.2 System settings window**. Here is a diagram of how to connect our recommended Trikdis relay RBI:

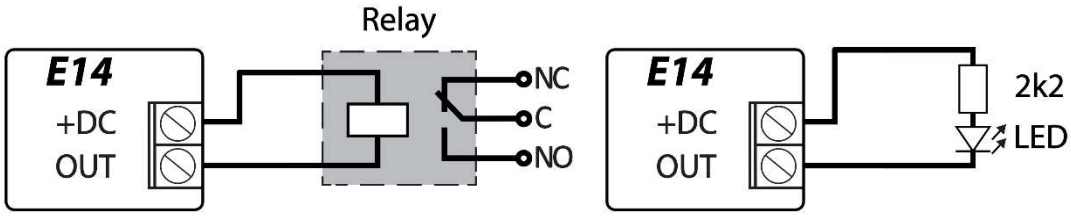

4. Add communicator in Protegus

1. Log in or sign in to www.protegus.eu.
2. Add the system to the ***Protegus***: press **Select system**; next **Add new system +**, and enter the required data as shown below (you can skip fields **Name**, **Address** and fill it later).

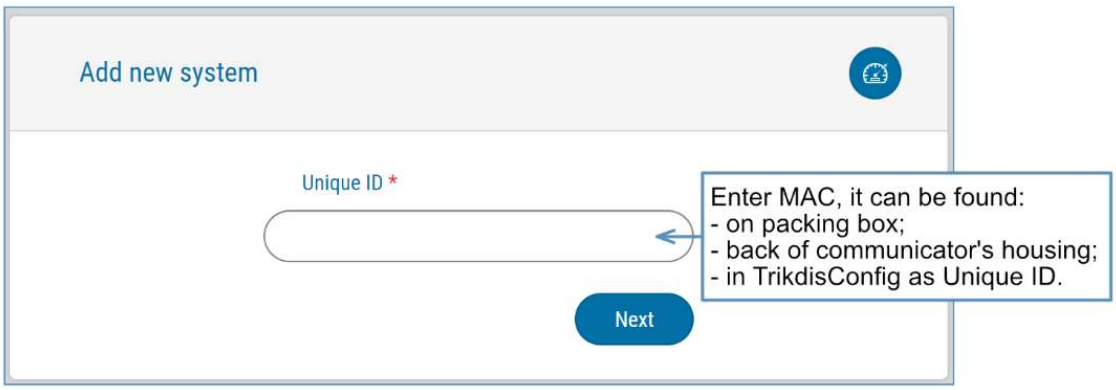

3. (Optional) If you will use remote arm/disarm feature, in ***Protegus*** main window, choose **Settings** tab and next windows choose **Settings** then tick the checkbox: **Arm/Disarm with PGM1.**

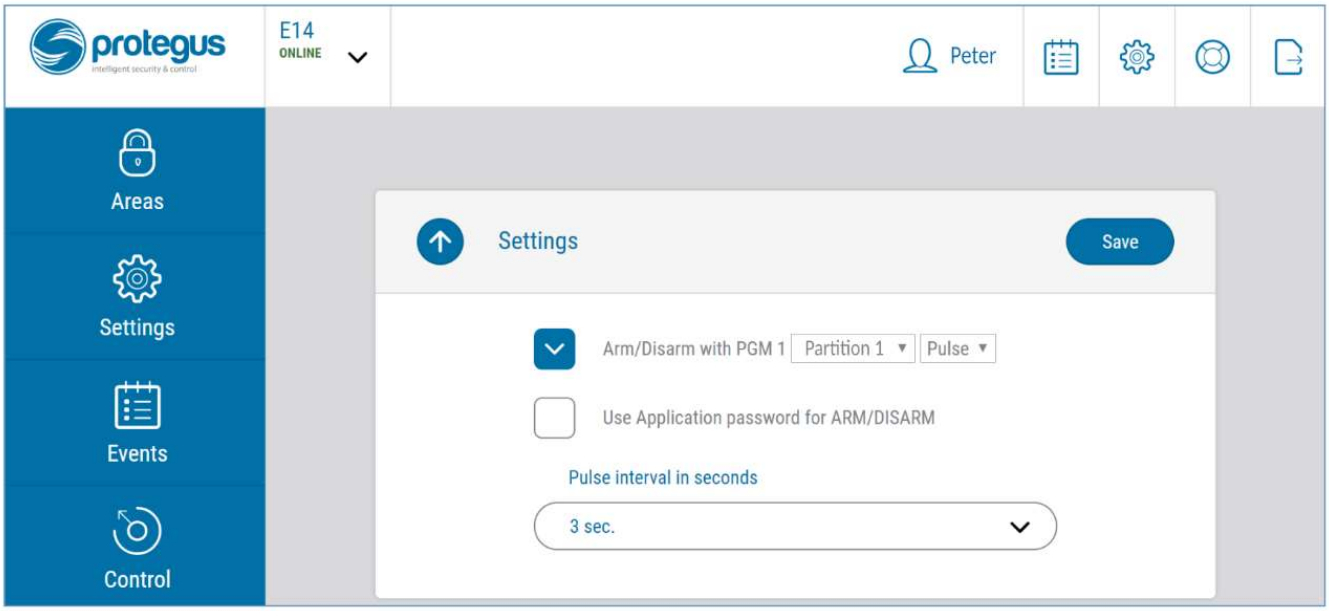

4.1 Additional settings for ARM/DISARM the system via keyswitch zone.

IMPORTANT: Control panels area, to which E14 output OUT is connected, must be set as keyswitch zone.

Follow the instructions below if the control panel is not directly managed, but with a ***E14*** PGM output switching keyswitch zone.

1. After entering the **IMEI/Unique ID** number, click **Next**. In the new window, click on the **Areas** in the side menu. In the window that appears, specify how many areas (1 or 2) are in the system and press **Next**.

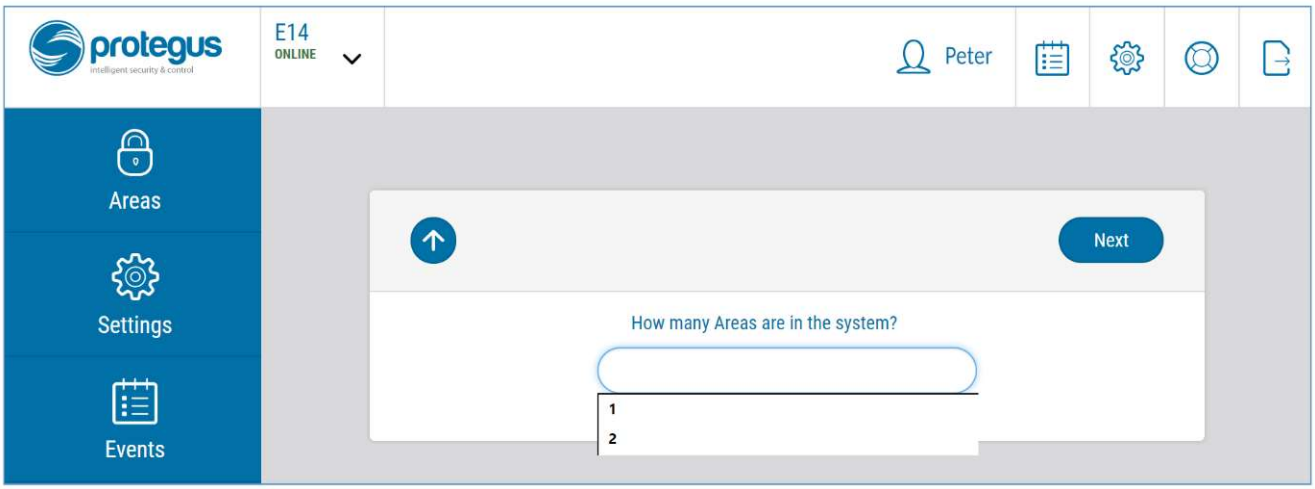

2. In the new window, specify the number of each area in the system and click on **Save**.

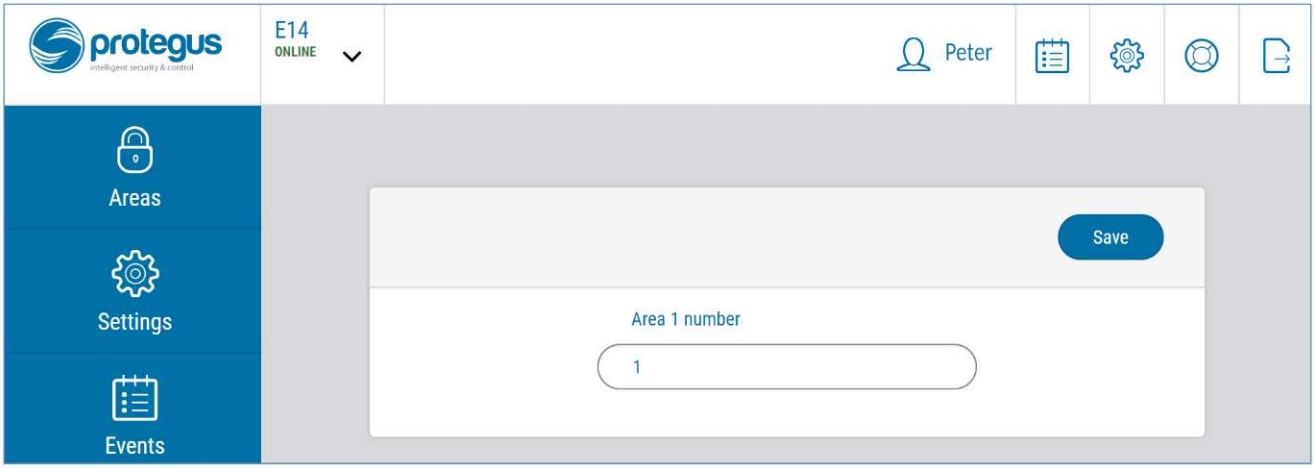

3. In the side menu, press **Settings** and in the opened window, press **Settings**. Check the box **ARM/DISARM with PGM1** and specify which area will be controlled with output. One PGM output can control one area (PGM 1 - Area 1, PGM 2 - Area 2).
4. Select **Level** or **Pulse**, depend on control panel keyswitch type. You can also change duration of the **Pulse** interval if it is required for the connected control panel.

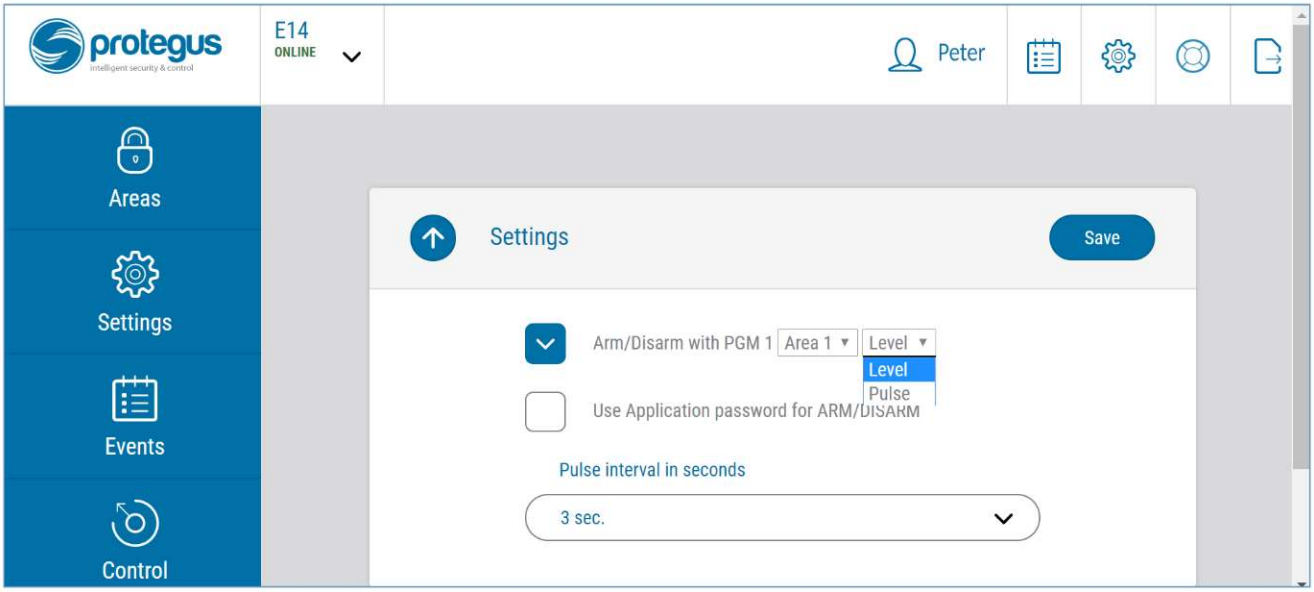

4.2 System management with Protegus

1. To control the system, go to the **Areas** window.
2. In the **Area** window, click on the area button. In the popup window, select an action (**ARM** or **OFF** the alarm area).
3. On request enter the user code or ***Protegus*** password.

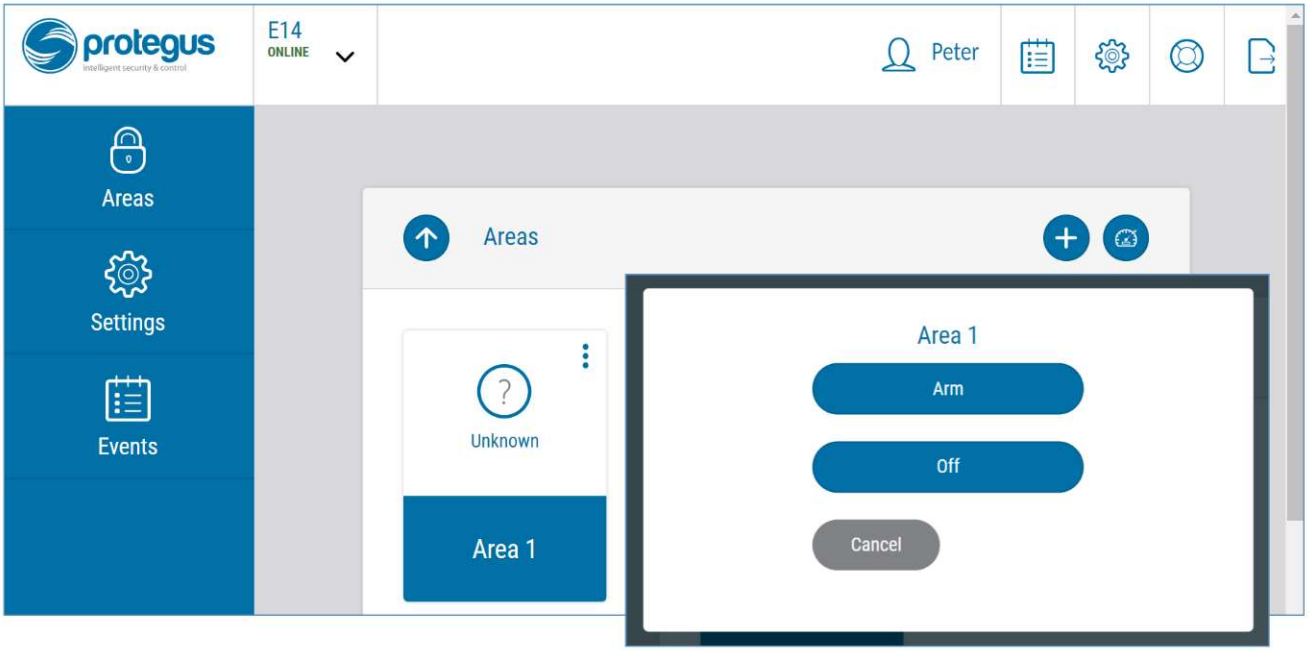

5. Connect *E14* to TrikdisConfig

Communicator can be configured using **TrikdisConfig** software for MS Windows via USB cable or remotely.

Important: To use remote configuration function, Protegus service must be enabled.

1. Download ***TrikdisConfig*** from www.trikdis.com (in search field type ***TrikdisConfig***), and install it.
2. Connect the communicator to ***TrikdisConfig***:

a. **Using USB cable:** run the configuration software ***TrikdisConfig***. The software will automatically recognise the connected device and will open a window for communicator configuration; or

b. **Remotely:** run the configuration software ***TrikdisConfig*.** In section **Remote access**, field **Unique ID** enter MAC address of communicator (MAC address is provided on the product package). (Optional) in the field **System Name** enter the desired name to the communicator. Press **Configure**.

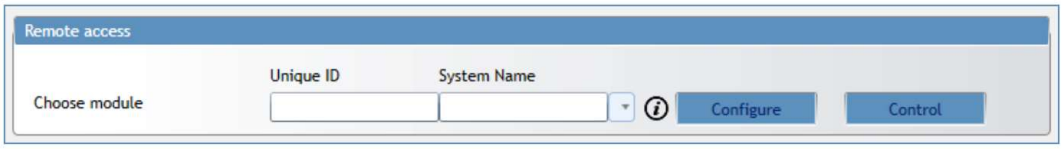

Note: When a new communicator firmware is released, ***TrikdisConfig*** will offer to upgrade it.

3. Click **Read [F4]** to read the communicators parameters and enter the Administrator or Installer code in the pop-up window. In order for the program to remember the code, check the box next to **Remember password**.
4. In new window, **Event Summary**, zones can be controlled. Also, (in all tabs) refresh time can be selected.

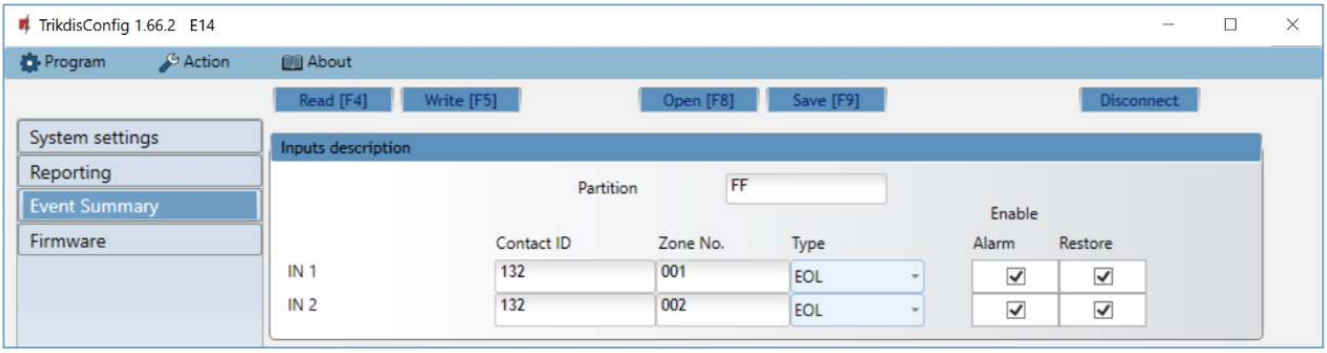

5. In **System settings** tab, PGM outputs can be controlled – turned off/on.

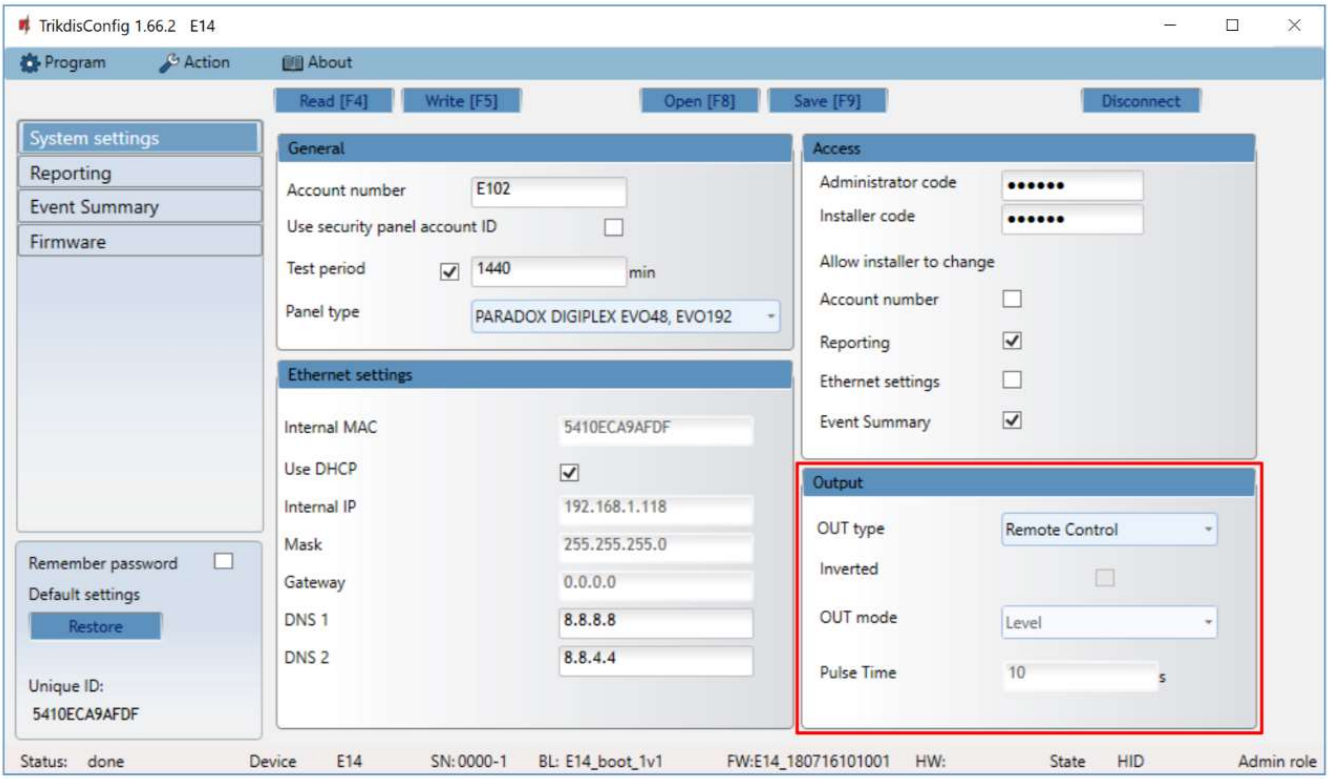

6. Set the required parameters for ***E14*** and click **Write [F5]**. To disconnect from ***E14***, click **Disconnect** and exit from **TrikdisConfig.**

Note: If administrator code is set as default (123456), it is not required to enter it and the request window will not appear.

To set up the communicator from a saved configuration file, click **Open [F8]** and browse your computer to find the configuration file.

6. Set operation parameters

6.1 Status bar description

Once the communicator parameters are read, the status bar will display information about the device:

Name	Description
Unique ID	MAC number of the device
Status	Action status
Device	Device type
SN	Serial number
BL	Bootloader version
FW	Firmware version
HW	Hardware version
State	Connection status
Admin	Access level (shows up after access code is confirmed)

6.2 System settings window

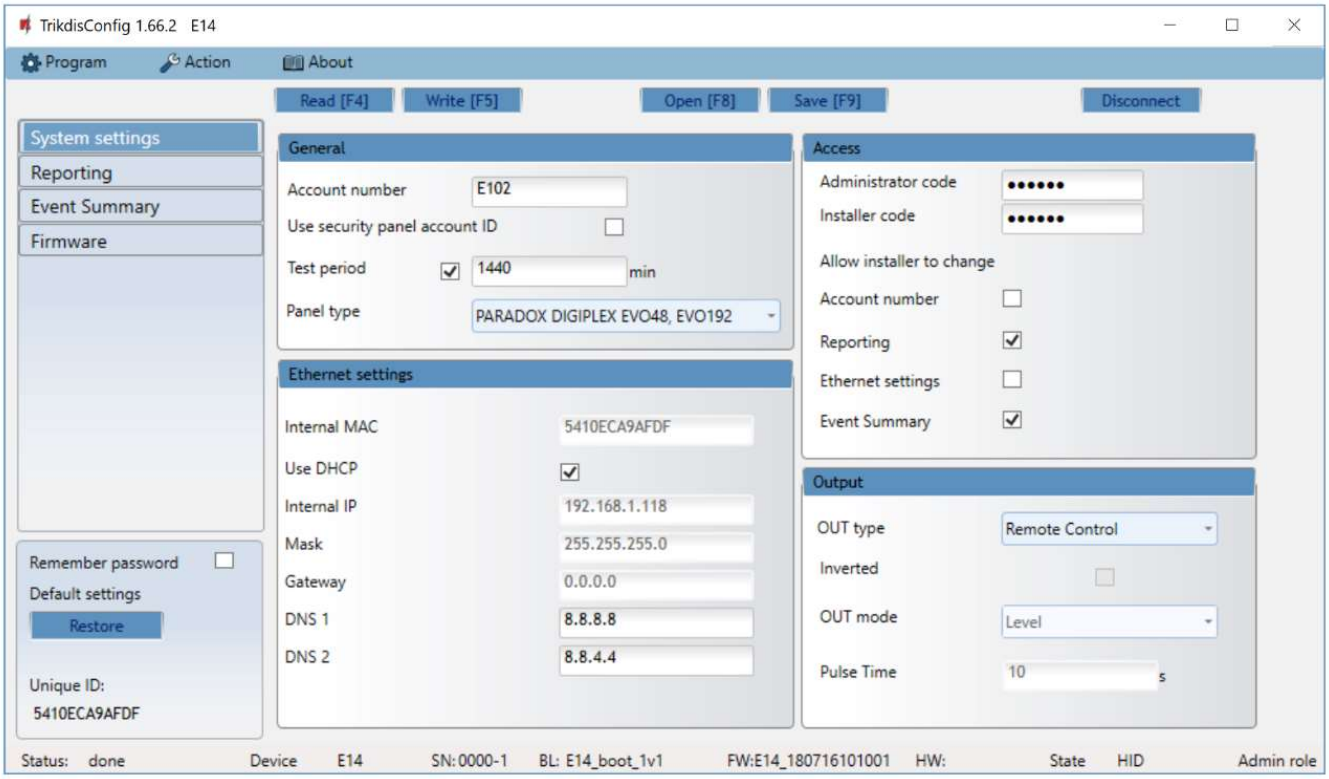

General

- Enter system Account number (4 symbols hexadecimal number) or select **Use security panel account ID** checkbox.
- **Test period**: periodic test messages will be sent according to a time interval set in this section.
- Select control **Panel type**.

Ethernet settings

- **Internal MAC -** unique communicator identifier code.
- Select **Use DHCP** checkbox for communicator to register automatically to the network.
  - If automatic registration is unsuccessful, enter **Internal IP address**, subnet **Mask**, **Gateway** address and **DNS** service manually.

Access Settings

- **Administrator code** - allows full access to the configuration.
- **Installer code** - allows limited access for installer to the configuration. Administrator can allow the installer to change:
  - Account number;
  - Reporting;
  - Ethernet settings;
  - Event summary.

Output

- Choose output operation type from list **OUT type.**
- Select **Inverted** checkbox if output function should be inverted.
- **OUT mode:**

- **Pulse:** a status will take time as indicated in **Pulse Time** (pulse period in seconds) field.
- **Level:** a status will change and remain the same until the next command.

6.3 Reporting window → ARC reporting tab

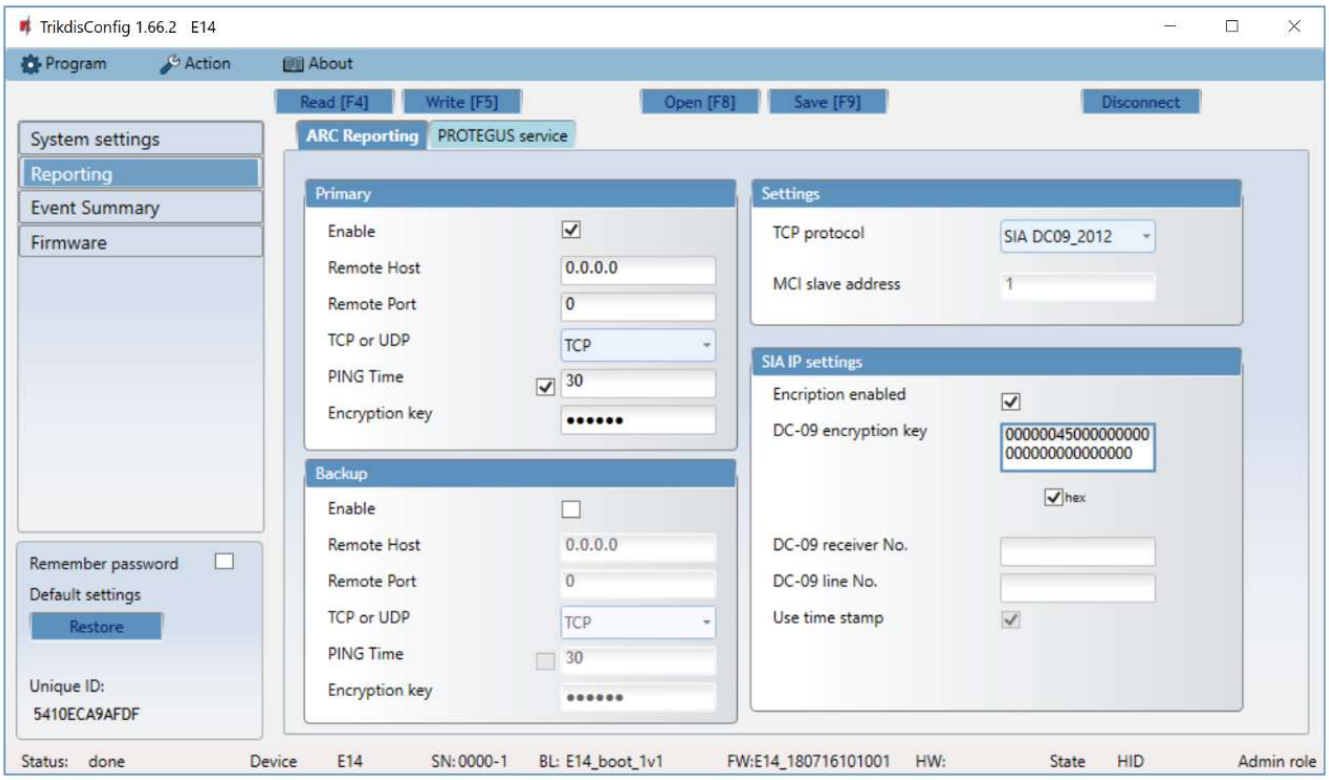

Primary and Backup settings

- To have connection via Primary or Backup channels select **Enable** checkboxes**.**
- Fill in fields for **Remote Host**, **Remote Port.**
- Choose reporting protocol **TCP** or **UDP.**
- Enable **PING Time** and set time between signals in seconds (required for communication control).
- Enter **Encryption key** (six-symbol hexadecimal number)**.**

Settings

- Choose **TCP protocol** encryption type.

SIA IP parameter settings

- **Encryption enabled** – if the DC09_2012 TCP protocol is selected, then encryption can be enabled.
- **DC09-2012 encryption key** – indicates the encryption key.
- **DC09-2012 receiver No**. – receiver's number is indicated.
- **DC-09 line No.** – specify the receiver line number.
- **Use time stamp –** the time will be included in the message if the field is checked.

6.4 Reporting window → Protegus service tab

Protegus service allows users to remotely monitor and control the communicator with Android, iOS and Web apps. It also enables remote configuration of the device via ***TrikdisConfig***.

For more information about ***PROTEGUS*** service visit www.protegus.eu.

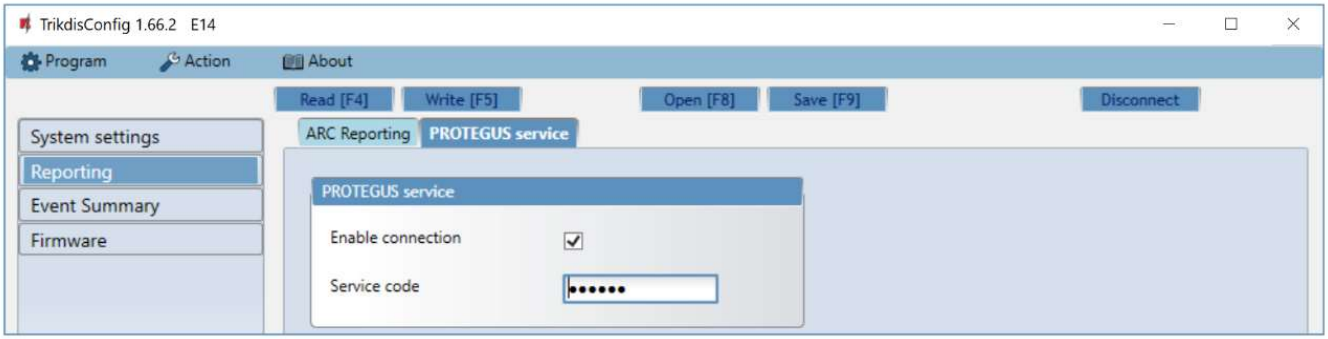

- Enable the ***Protegus*** cloud service at **Reporting → PROTEGUS service** tab.
- For additional security enter **Service code** (default is 123456). If the Service code is changed, you will need to enter it, when adding the communicator to ***Protegus***.

6.5 Event Summary window

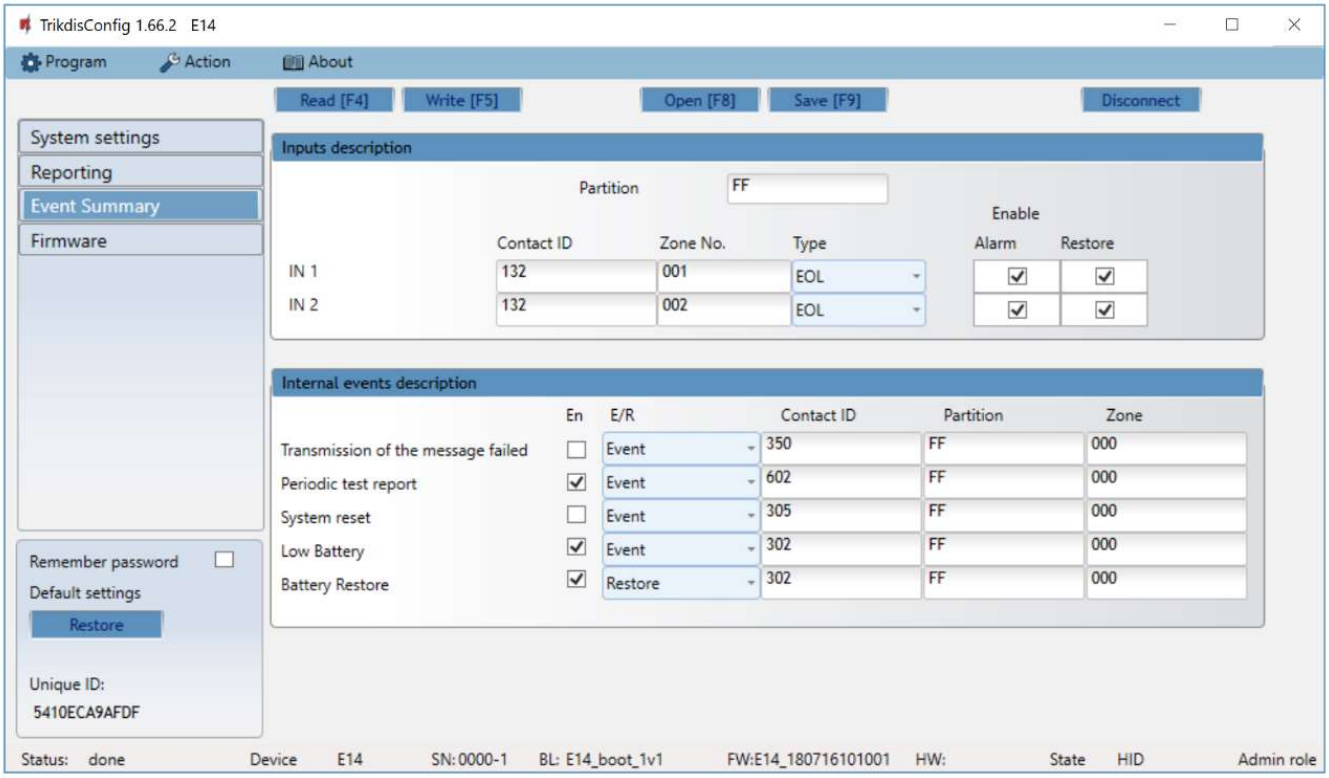

Input description

- To set contact ID event codes to inputs fill in fields:
  - **Partition**;
  - **Contact ID** - customize event code or leave the default value;
  - **Zone No** – set which zone corresponds to IN 1 or/and IN 2;
- Select **Type** of inputs (NO, NC, EOL).
- **Enable** - select **Alarm** to receive report when event occurs; select **Restore** to receive report when input line will restore.

Internal events description

- **E/R**: To describe internal events, select event type (Event or Restore) and describe **Contact ID** code, **Partition** and **Zone** as necessary.

6.6 Reset factory settings

To restore the communicator's factory defaults, you need to click the **Restore** button in the ***TrikgisConfig*** window.

7. Perform system test

1. After configuration and installation is complete, perform a system test. Activate an event in the control panel, and make sure that the event arrives to the alarm receiving centre or is received by the mobile application.
2. To test communicator inputs, activate it and make sure that the correct messages arrives to recipients (app users).
3. To test the communicator output, please activate it remotely or initiate the activating event.

8. Manual firmware update

The communicator firmware can be updated or changed manually. After an update, all the previous communicator parameters will remain the same.

Note:	If there is an installed antivirus software on your computer, it might block automatic firmware update option. In this case, you must reconfigure your antivirus software.

When writing firmware manually, it can be changed to a newer or older version. To update:

1. Run ***TrikdisConfig***.
2. Connect the communicator via USB cable to the computer or connect to the communicator remotely.
   a. If newer firmware version exists, the software will offer to download the newer firmware version file.

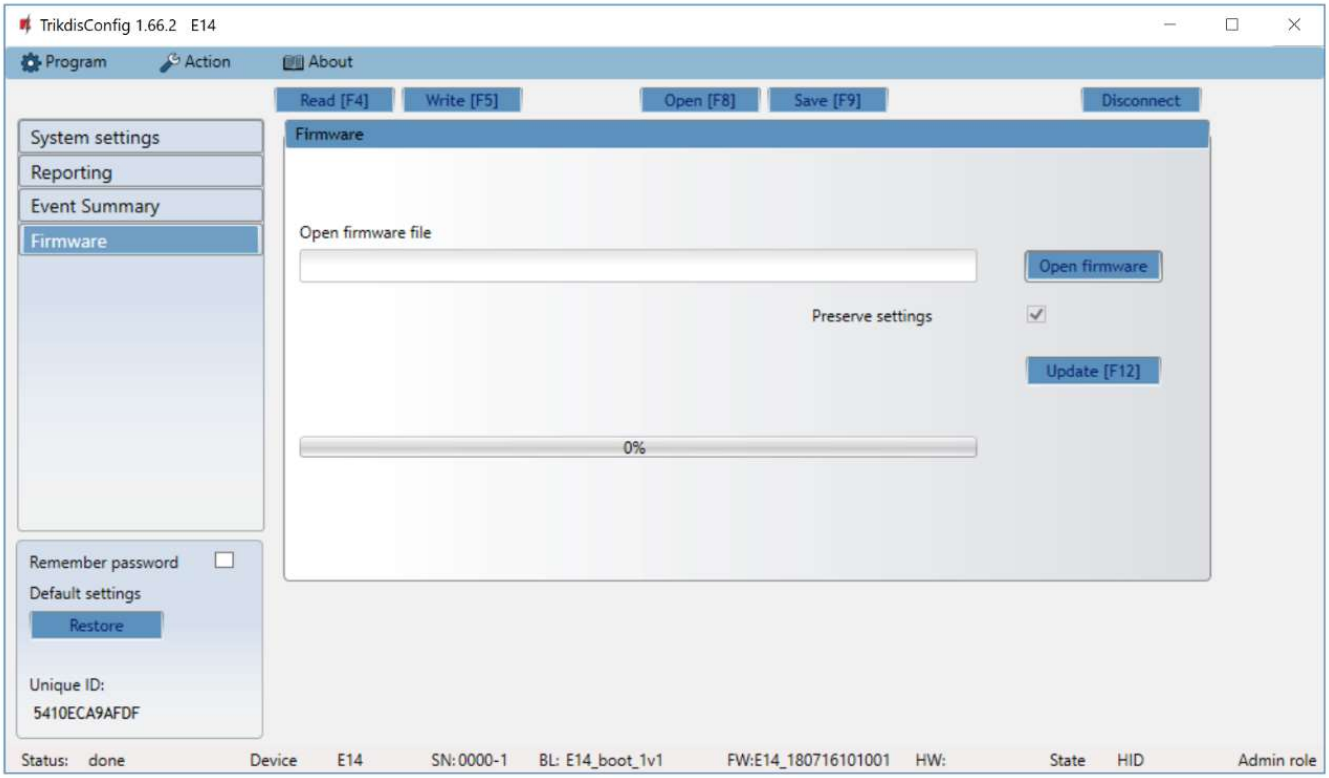

3. Select the menu branch **Firmware**.
4. Press **Open firmware** and select the required firmware file.
   a. If you do not have the file, the newest firmware file can be downloaded by registered user from www.trikdis.com, under the download section of the ***E14*** communicator.
5. To save configuration parameters, which were set earlier, check box **Preserve settings**.
6. Press **Update [F12]**.
7. Wait for the prompt about the completed update to appear.
8. Click **OK** in the prompted window.